BOSTON WHALER

250 Dauntless

Sales Training January 2021

All-New : 250 Dauntless

2021 Model Year

2021 Model Year

All-New : 250 Dauntless

This data is internal to Brunswick.

2021 Model Year

All-New : 250 Dauntless

This data is internal to Brunswick.

250 Dauntless Sales Training

- Spec Sheet
- Hull Changes
- NEW Bow Layout
- Features / Benefits
- Notable Options
- Performance
- Top 5 selling features

SPECIFICATIONS: Comparison between new and old models

240 Dauntless	250 Dauntless
LOA: 23' 11" (7.29 m) (on centerline, from engine to bow mounting location)	LOA: 24' 9" (7.32 m) (on centerline, from engine to bow mounting location) 10” Longer
LOA: 24’ 8" (7.52m) (with platforms)	LOA: 25’ 8 " (7.62 m) (with platforms) 12” Longer
Beam: 8' 6" (2.59 m)	Beam: 8' 6" (2.59 m)
Draft: 14" (0.36m)	Draft: 15" (0.38m) 1” Deeper
Weight (dry, no engine): 3,300 lbs (1497 kg)	Weight (dry, no engine): 3,390 lbs (1538 kg)
Weight (w/engine, fuel & water): 4,654 lbs (2,722 kg)	Weight (with engine, fuel, and water): 4,740 lbs (2150 kg)
Maximum Weight Capacity: 3,000 lbs (1361 kg)	Maximum Weight Capacity: 3,400 lbs (1,542kg)
Swamped Capacity: 6,000 lbs (2722 kg)	Swamped Capacity: 5,600 lbs (2,540 kg)
Persons Capacity: 9	Persons Capacity: 10 One Additional Person
Maximum HP: 350 hp (261 kW	Maximum HP: 400 hp (298 kW) 50 hp More
Minimum HP: 250 hp (186 kW)	Minimum HP: 250 hp (186 kW)
Maximum Engine Weight: 700 lbs (318 kg)	Maximum Engine Weight: 720 lbs (326 kg)
Transom Height: 25" (.64 m)	Transom Height: 30" (.76 m) 5” Taller
Deadrise at Transom: 16º	Deadrise at Transom: 18º 2° Steeper
Fuel Capacity: 90 gallons (341L)	Fuel Capacity: 90 gallons (341L)
Bridge Clearance: 5’ 9” (1.75 m)	Bridge Clearance: 6’ 1” (1.85 m) 2” Taller
Bridge Clearance with T-Top: 7’ 9” (2.36 m)	Bridge Clearance with T-Top: 7’ 11” (2.41 m) 2” Taller
Package boat specs (base boat on trailer, engine up:) 32’ 4” X 8’ 6” X 8’ 5”	Package boat specs (base boat on trailer, engine up:) 32’ 11” X 8’ 6” X 8’ 10”

©2019 Boston Whaler. Confidential and all rights reserved.

This data is internal to Brunswick.

*LOA: (on centerline, from bow to engine mounting location)

What’s new for the Dauntless Platform

- Keel Up Re-design
  - More capable and seaworthy- sharper bow entry with Increased flare to create better offshore performance
  - Increased freeboard- 2” more cockpit depth at the bow
  - Increased LOA to 25’ 8” from 24’ 8”

250 Dauntless

240 Dauntless

©2019 Boston Whaler. Confidential and all rights reserved.

This data is internal to Brunswick.

250 Dauntless

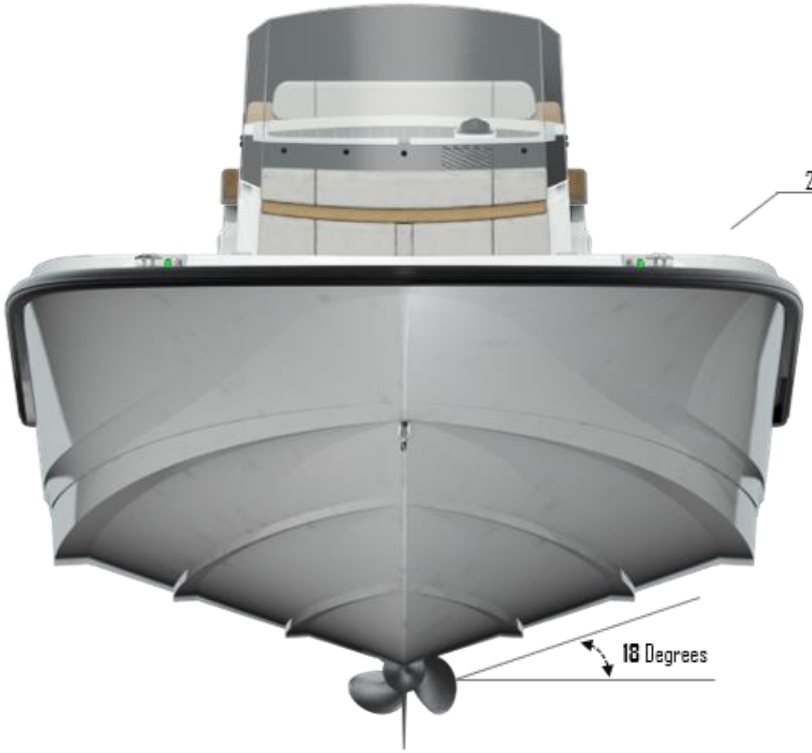

240 Dauntless

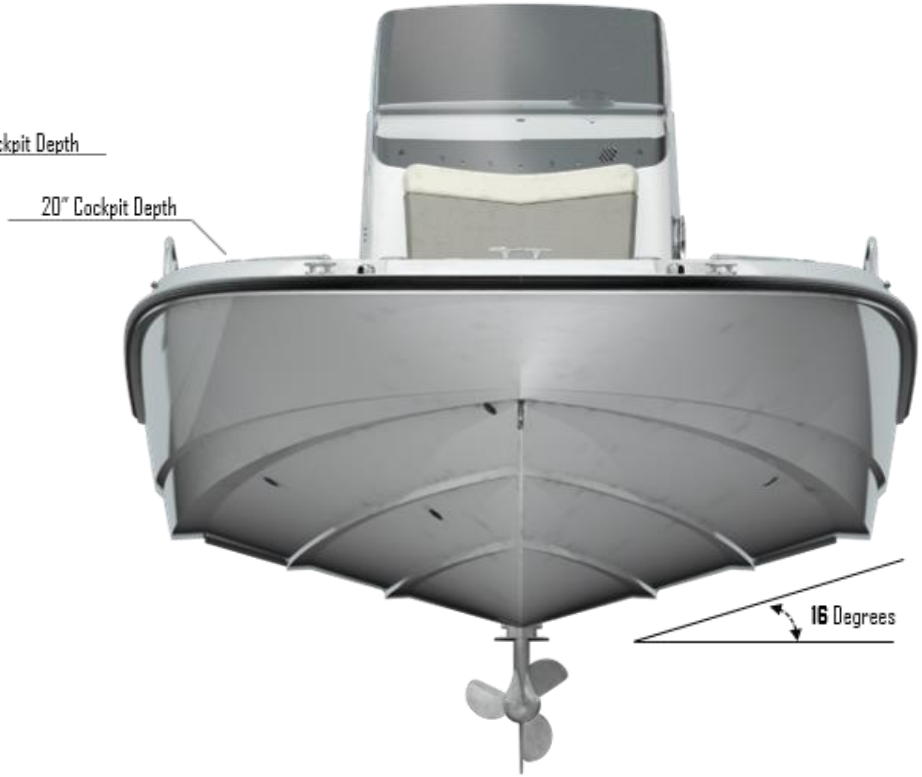

This data is internal to Brunswick.

Hull changes

- Pointed bow with increased flare: Provides a softer, drier ride with increased capability
- Length over all 1’ longer
- Gained 2” cockpit depth

©2019 Boston Whaler. Confidential and all rights reserved.

This data is internal to Brunswick.

What’s new for the Dauntless Platform

More versatility for the whole family

- ❑ More standard fishing options
  - Standard aft livewell
  - Flat, single level stern deck with no obstructions
  - Gunwale rod holders
- ❑ Improved comfort
  - Forward console lounge
  - Helm seating options
- ❑ Watersports tow point from tops
- ❑ No compromises - accommodates everyone's needs:
  - Fishing
  - Watersports
  - Entertaining

©2019 Boston Whaler. Confidential and all rights reserved.

This data is internal to Brunswick.

Bow Improvements

- All-new forward lounge
  - fold down arm rest
  - lockable, dry rod storage
- Bow cushions with flip-up backrests
- Forward rod holders (4)
- Welded stainless steel forward grab rails
- Fish box / cooler in forward bow deck with easy access paddle latch

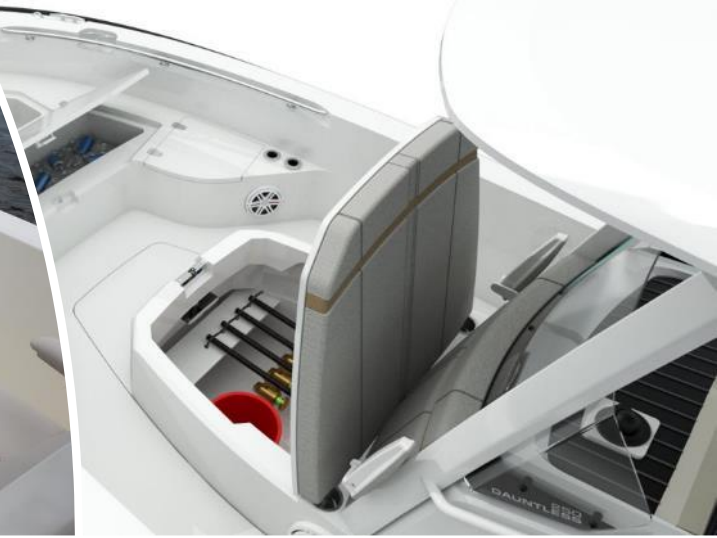

All NEW Helm Console

- New SeaDek lined chuck space with wireless phone charging (phones, wallet, keys)

- New model designator on windscreen for a very custom look

- Improved head access, wider entry door

©2019 Boston Whaler. Confidential and all rights reserved.

This data is internal to Brunswick.

All NEW Helm Console Face

- Cast stainless steel steering wheel with knob
- Compass
- 12V receptacle
- optional glove box
- NEW dash visor chuck space with wireless phone charging
- NEW stainless-steel drink holders (2)
- larger electronics mounting surface fits 12” screen
- Electrical switch panel with circuit breaker protection

NEW Helm Configurations

Standard Console

Mercury SC1000 Gauges
Aluminum switch panel
Steering Wheel from DA Pro

Axiom 9

Vessel View 4
Aluminum switch panel
VHF Radio
Fusion Stereo Head Unit
Glove Box

Axiom 12

Vessel View 4
Aluminum switch panel
VHF Radio
Fusion Stereo Head Unit
Glove Box

©2019 Boston Whaler. Confidential and all rights reserved.

This data is internal to Brunswick.

NEW Helm Configuration: Dual Axiom 9 Inch Screens

Four Helm Seat Configurations

1. STANDARD: Reversible seat with storage / Cooler
2. OPTIONAL: Reversible seat with livewell
3. OPTIONAL: Leaning Post frame with 75 Quart Yeti cooler
4. OPTIONAL: Deluxe Leaning Post with aft drawer storage

1

2

3

4

This data is internal to Brunswick.

STANDARD: Reversible Leaning Post with Storage

- ❑ Seat base and fuel tank cover molded as a single fiberglass piece
- ❑ Insulated fiberglass tub can be used for storage or a cooler
- ❑ New upholstery

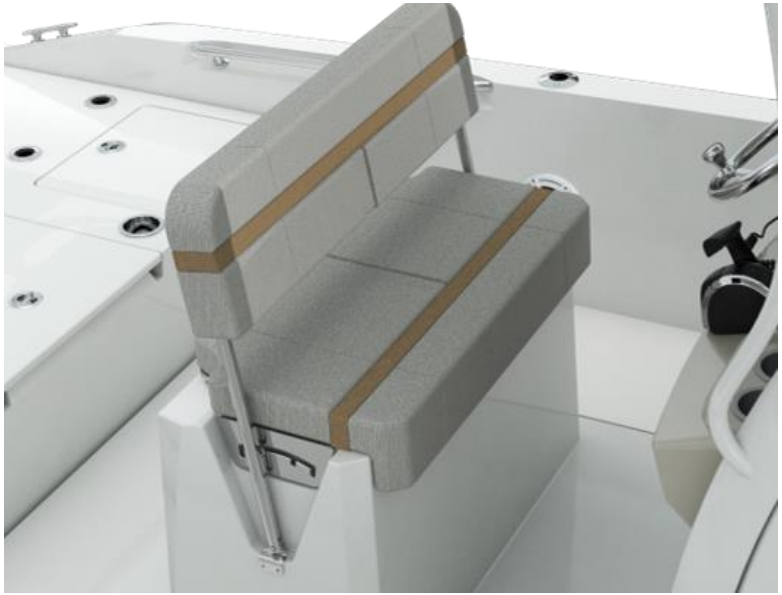

This data is internal to Brunswick.

OPTIONAL: Reversible Leaning Post with Livewell

- ❑ Seat base and fuel tank cover molded as a single fiberglass piece
- ❑ Cooler tub becomes livewell
- ❑ New upholstery

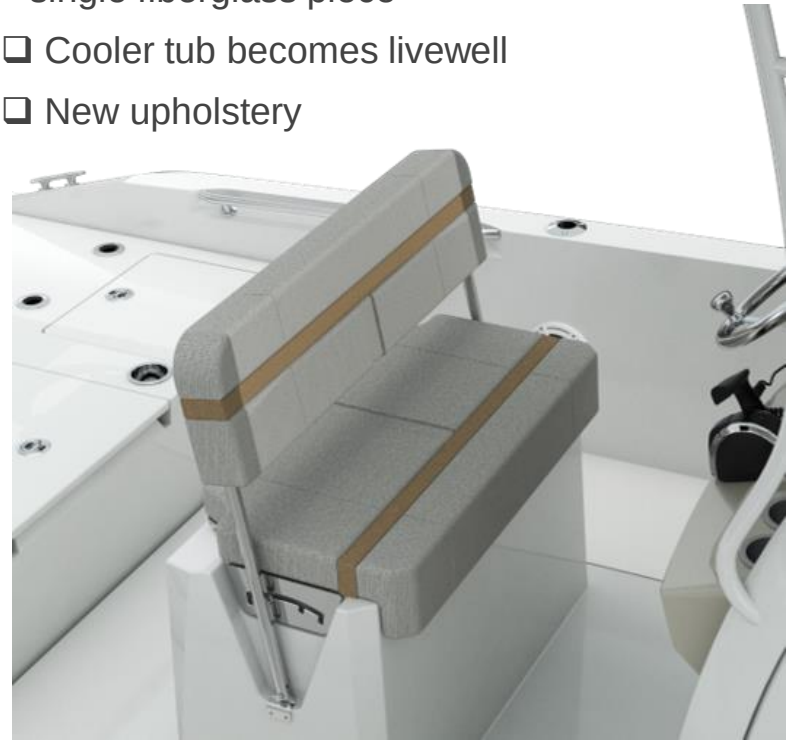

This data is internal to Brunswick.

OPTIONAL: Frame Leaning Post with cooler

- ❑ Powder coated tube seat base with 75 Quart Yeti cooler
- ❑ New upholstered bench seat with flip-up bolsters and folding arm rest

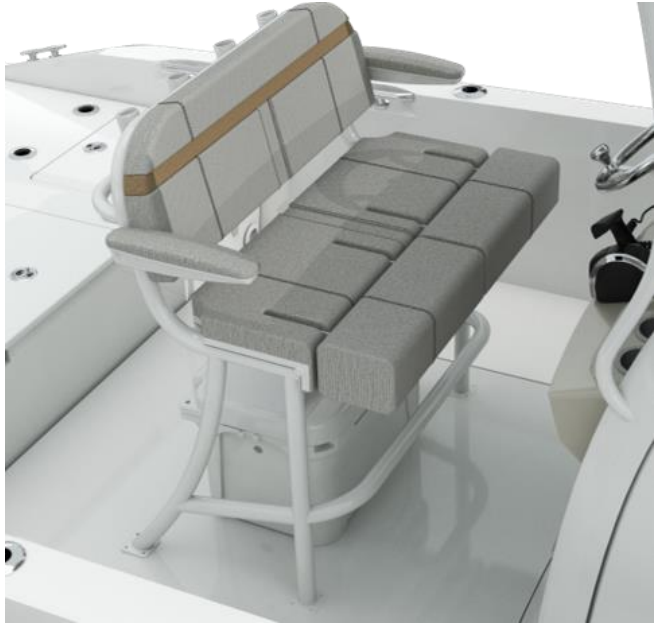

This data is internal to Brunswick.

OPTIONAL:
Deluxe Leaning Post with Aft Drawer Storage

- ❑ Fiberglass seat base w/ aft storage drawers
  - Storage area accommodates a 5-gallon bucket inside
  - New upholstered bench seat with stand-up bolsters and folding arm rest

Stern Deck

- ❑ Flat surface (no more step)
- ❑ Stainless cup holders
- ❑ 4 standard rod holders
- ❑ Usable with seats up
- ❑ Recessed hardware
- ❑ No cushion snaps

©2019 Boston Whaler. Confidential and all rights reserved.

This data is internal to Brunswick.

STANDARD:
Live Well with Jump Seats

- ❑ New 35-gallon livewell
  - insulated blue interior and flush mounted lid
- ❑ Dual flip-up jump seats
  - innovative design provides ergonomic seated height.

Deployable Swim Ladder

- ❑ Angled swim ladder for safer boarding
- ❑ Ladder stows under a fiberglass lid

©2019 Boston Whaler. Confidential and all rights reserved.

This data is internal to Brunswick.

Rail Choices

- Standard: Low profile rails

©2019 Boston Whaler. Confidential and all rights reserved.

This data is internal to Brunswick.

Rail Choices

- ❑ Optional High Rails
- ❑ Midship rod holder not compatible with high rail

©2019 Boston Whaler. Confidential and all rights reserved.

This data is internal to Brunswick.

Rail Choices

- ❑ Optional Split Bow Rails
- ❑ Midship rod holder not compatible with high rail

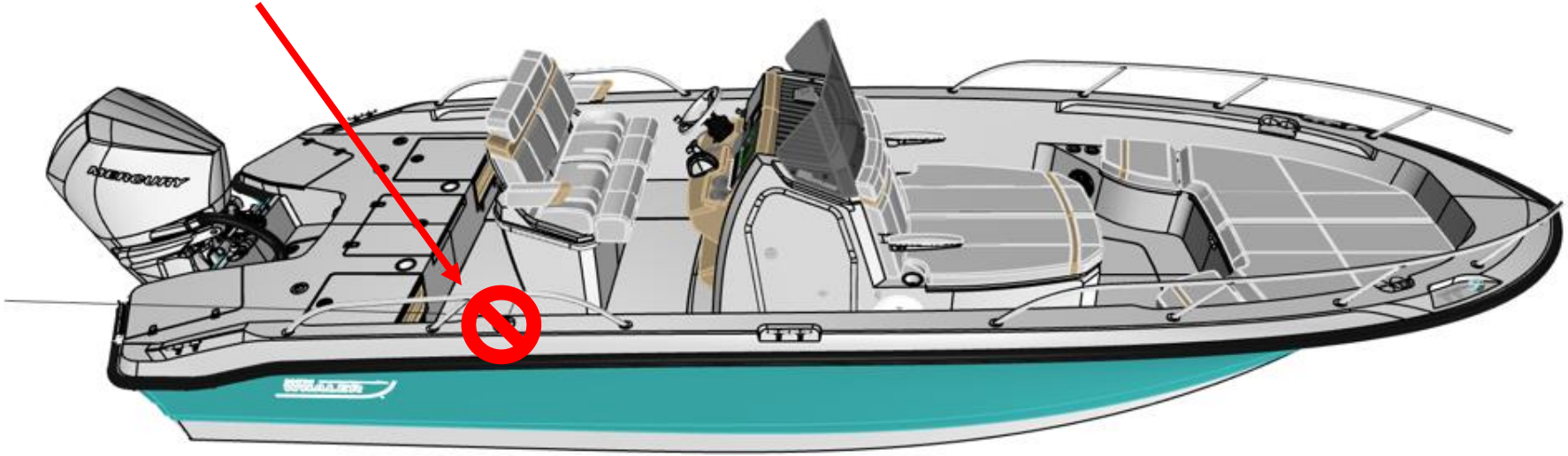

©2019 Boston Whaler. Confidential and all rights reserved.

This data is internal to Brunswick.

Rail Choices

- Optional: High / Low Rails
  - High aft cockpit rail and low-profile bow rail

©2019 Boston Whaler. Confidential and all rights reserved.

This data is internal to Brunswick.

Optional:
Fiberglass Hard-Top

- ❑ Optional: White or Black Frame
- ❑ Optional; Colored gel on the underside of the fiberglass hardtop

Optional: T-Top

- ❑ Optional: Blue or Black Canvas
- ❑ Optional: White or Black Frame

Water Sports

- Tow point from both hard top and T-top

©2019 Boston Whaler. Confidential and all rights reserved.

This data is internal to Brunswick.

Engines

Standard:

- 250 XXL V8 DTS Mercury FourStroke with hydraulic power steering

Optional:

- 300 XXL V8 DTS Mercury FourStroke with hydraulic power steering
- 350 XXL L6 DTS Mercury Verado FourStroke with hydraulic power steering
- 400 XXL L6 DTS Mercury Verado FourStroke with hydraulic power steering

- SmartCraft deluxe gauge package
- Tilt steering
- Stainless steel propeller
- Fuel/water separator

Available in black or white

©2019 Boston Whaler. Confidential and all rights reserved.

This data is internal to Brunswick.

Notable Options:

- Active engine trim
- Anchor roller (not compatible with trolling motor panel option) (not for use as anchor stowage)
- Bow and stern rails, High - (deletes low profile rails) (not compatible with Trolling Motor Panel)
- Bow table (with dedicated storage)
- Bow tow eye
- Electric trim tabs with indicator
- Glove Box (Not compatible with 9” additional display)
- Porta potti with deck pump-out
- Raw-water washdown
- Satellite radio (Sirius ® satellite receiver with antenna) (must order stereo option)
- SeaDek Cockpit flooring (mocha/black teak, UV protected, non-absorbent foam)
- Shower - freshwater with 12-gallon tank
- Split bow rail – Includes high aft rails (deletes low profile bow rail) (not compatible with Trolling Motor Panel)
- Stereo - FUSION® AM / FM with waterproof speakers (4) and USB input (FUSION® Bluetooth enabled)
- Sunshade at bow (must select T-Top or Fiberglass Hardtop)
- Vessel View 4” Display (network connections to Raymarine with Navigation Package)
- White rub-rail with stainless steel insert

©2019 Boston Whaler. Confidential and all rights reserved.

This data is internal to Brunswick.

Other Notable Options:

ALL ACTIVITY TOWER®
- Casting platform
- Ski and wakeboard racks
- Watersports tow point

TROLLING MOTOR 36V WITH CHARGER (not compatible with anchor roller or Bow rail or split bow rail options)
- Battery boxes for trolling motors (3)
- Motorguide XI-5 trolling motor with GPS
- Trolling motor panel with wiring
- Battery charger

TROLLING MOTOR PANEL (not compatible with anchor roller or Bow rail or split bow rail options)
- Battery boxes for trolling motors (3)
- Trolling motor panel with wiring

POWERPOLE
- Powerpole bracket (black or white)
- Powerpole 8’ or 10’ (black or white)

JACKPLATE
- Atlas 10” offset heavy duty jackplane
- Control at console

©2019 Boston Whaler. Confidential and all rights reserved.
This data is internal to Brunswick.

Other Notable Options:

REVERSIBLE PILOT SEAT LIVEWELL
- Livewell (32 gallon) with blue interior
- Rod holders - stainless steel (2)

DELUXE LEANING POST
- Fiberglass leaning post
- Fold down armrests
- Flip up bolsters
- Integrated storage drawers

COMPETITION LEANING POST
- Aluminum frame leaning post
- Fold down armrests
- Flip up bolsters
- 4 integrated rod holders
- Carry on cooler (Yeti ~~65~~ 75 Qt.)

PEDESTAL FISHING SEATS (2)

VHF RADIO
- Raymarine Ray 53 VHF /W GPS

T-TOP (black or blue)
- Dome light (red and white)
- Storage bag
- Watersports tow point
- Rod holders (4)

FIBERGLASS HARDTOP
- Dome light (red and white)
- Lifejacket storage
- Watersports tow point
- Rod holders (4)

ALUMINUM TRAILER
- Disc brakes
- Dual torsion axle
- Guide on stanchions
- LED lights
- Radial tires
- Spare tire

PREMIUM AUDIO
- 4 speakers plus 2 Subs
- Add Amplifier
- Upgrade speakers to M series

©2019 Boston Whaler. Confidential and all rights reserved.
This data is internal to Brunswick.

Optional: Electronics Package

9” RAYMARINE AXIOM 9 RV (RealVision)ELECTRONICS/NAVIGATION PACKAGE
Raymarine Axiom 9 RealVision 3D, 9” touch screen (GPS, chart plotter, fishfinder)
RealVision 3D, DownVision, SideVision and Chirp transom transducer
Navionics Chart Card: North America/Canada
Navionics Chart Card: Central/South America
Navionics Chart Card: Europe/Mid East/Asia
Navionics Chart Card: AU/NZ

9” Raymarine Axiom Additional Display (Must select the 9” Axiom Navigation Package Option or the 12” Axiom Navigation Package Option) (Not compatible with GloveBox)
Raymarine Axiom 9” with single channel chirp sonar

12” RAYMARINE AXIOM RV ELECTRONICS/NAVIGATION PACKAGE
Raymarine Axiom RV, 12.1” screen (GPS / chart plotter / fishfinder)
RV-100 3D Transom Mount Transducer
Navionics Chart Card – North America/Canada
Navionics Chart Card – Central/South America
Navionics Chart Card – Europe/Mid East/Asia
Navionics Chart Card – AU/NZ

©2019 Boston Whaler. Confidential and all rights reserved.
This data is internal to Brunswick.

Canvas options

- Combination helm seat / console cover (black or blue)
- Console cover (black or blue)
- Console lounge seat with backrest cover (black or blue)
- Helm seat cover (black or blue)
- Sun top with boot and stainless-steel fittings (black or blue)

©2019 Boston Whaler. Confidential and all rights reserved.
This data is internal to Brunswick.

250DNT Engine Performance: 250 V8 AMS

		Speed		Fuel Consumption			
	RPM	mph	knots	gph	mpg	nmpg	range (mi)
Idle	600	2.4	2.0	0.8	3.13	2.72	254
	1000	4.2	3.6	1.3	3.32	2.88	269
	1500	6.4	5.6	2.0	3.28	2.85	266
	2000	8.0	6.9	3.1	2.61	2.26	211
	2500	9.7	8.4	4.2	2.31	2.01	187
	2750	12.2	10.6	5.1	2.39	2.08	194
	3000	14.6	12.6	5.9	2.49	2.16	201
	3250	18.3	15.9	6.1	3.00	2.61	243
	3500	22.4	19.4	7.1	3.17	2.75	257
	4000	28.6	24.8	9.1	3.14	2.72	254
	4500	33.5	29.1	11.1	3.03	2.63	246
	5000	38.1	33.0	13.9	2.74	2.38	222
	5500	43.0	37.3	18.9	2.27	1.97	184
WOT	5960	48.0	41.7	21.9	2.20	1.91	178

©2019 Boston Whaler. Confidential and all rights reserved.

250DNT Engine Performance: 300 V8 AMS

		Speed		Fuel Consumption			
	RPM	mph	knots	gph	mpg	nmpg	range (mi)
Idle	600	2.4	2.1	0.8	3.20	2.78	259
	1000	4.9	4.2	1.4	3.59	3.12	291
	1500	7.1	6.1	2.1	3.36	2.92	272
	2000	8.8	7.6	3.5	2.50	2.17	203
	2500	10.9	9.5	4.7	2.32	2.01	188
	2750	12.6	10.9	5.5	2.30	2.00	187
	3000	15.3	13.2	6.1	2.52	2.19	204
	3250	19.4	16.8	6.7	2.92	2.53	236
	3500	25.4	22.1	7.8	3.26	2.83	264
	4000	33.4	29.0	10.7	3.12	2.71	252
	4500	37.9	32.9	13.6	2.79	2.42	226
	5000	42.4	36.8	18.4	2.31	2.01	187
	5500	47.0	40.8	22.2	2.12	1.84	171
WOT	5930	51.2	44.4	23.4	2.19	1.90	177

©2019 Boston Whaler. Confidential and all rights reserved.

250DNT Engine Performance: 350 Verado

		Speed		Fuel Consumption			
	RPM	mph	knots	gph	mpg	nmpg	range (mi)
Idle	600	2.4	2.1	0.8	3.00	2.61	243
	1000	4.3	3.7	1.2	3.54	3.08	287
	1500	6.5	5.6	1.8	3.58	3.11	290
	2000	8.2	7.1	2.8	2.96	2.57	240
	2500	10.0	8.7	4.4	2.27	1.97	184
	2750	12.3	10.6	5.4	2.29	1.99	185
	3000	13.8	12.0	6.0	2.32	2.01	188
	3250	16.5	14.3	6.3	2.61	2.27	212
	3500	20.5	17.8	7.1	2.88	2.50	233
	4000	28.6	24.8	9.0	3.17	2.75	257
	4500	34.8	30.2	12.2	2.85	2.48	231
	5000	39.7	34.5	15.5	2.57	2.23	208
	5500	44.6	38.7	19.4	2.30	1.99	186
	6000	48.8	42.3	26.5	1.84	1.60	149
WOT	6400	53.7	46.6	31.1	1.73	1.50	140

Acceleration: time to plane 5.2 secs
Idle - 30 mph 6.9 secs

©2019 Boston Whaler. Confidential and all rights reserved.

250DNT Engine Performance: 400 Verado

		Speed		Fuel Consumption			
	RPM	mph	knots	gph	mpg	nmpg	range (mi)
Idle	600	2.8	2.4	0.8	3.73	3.24	302
	1000	4.8	4.1	1.2	3.96	3.44	321
	1500	6.9	6.0	1.8	3.94	3.42	319
	2000	8.6	7.4	2.7	3.17	2.75	257
	2500	10.7	9.3	4.5	2.40	2.09	195
	2750	13.0	11.2	5.4	2.42	2.10	196
	3000	14.0	12.2	6.0	2.35	2.04	191
	3250	16.7	14.5	6.3	2.64	2.30	214
	3500	21.0	18.2	6.9	3.04	2.64	246
	4000	29.0	25.1	9.3	3.13	2.72	254
	4500	34.5	30.0	12.0	2.89	2.51	234
	5000	39.8	34.6	15.1	2.64	2.29	213
	5500	44.2	38.4	19.1	2.32	2.01	188
	6000	49.0	42.5	26.2	1.87	1.62	151
WOT	6760	56.3	48.9	36.8	1.53	1.33	124

Acceleration: time to plane 5.2 secs
Idle - 30 mph 7.1 secs

©2019 Boston Whaler. Confidential and all rights reserved.

250DNT Engine Performance

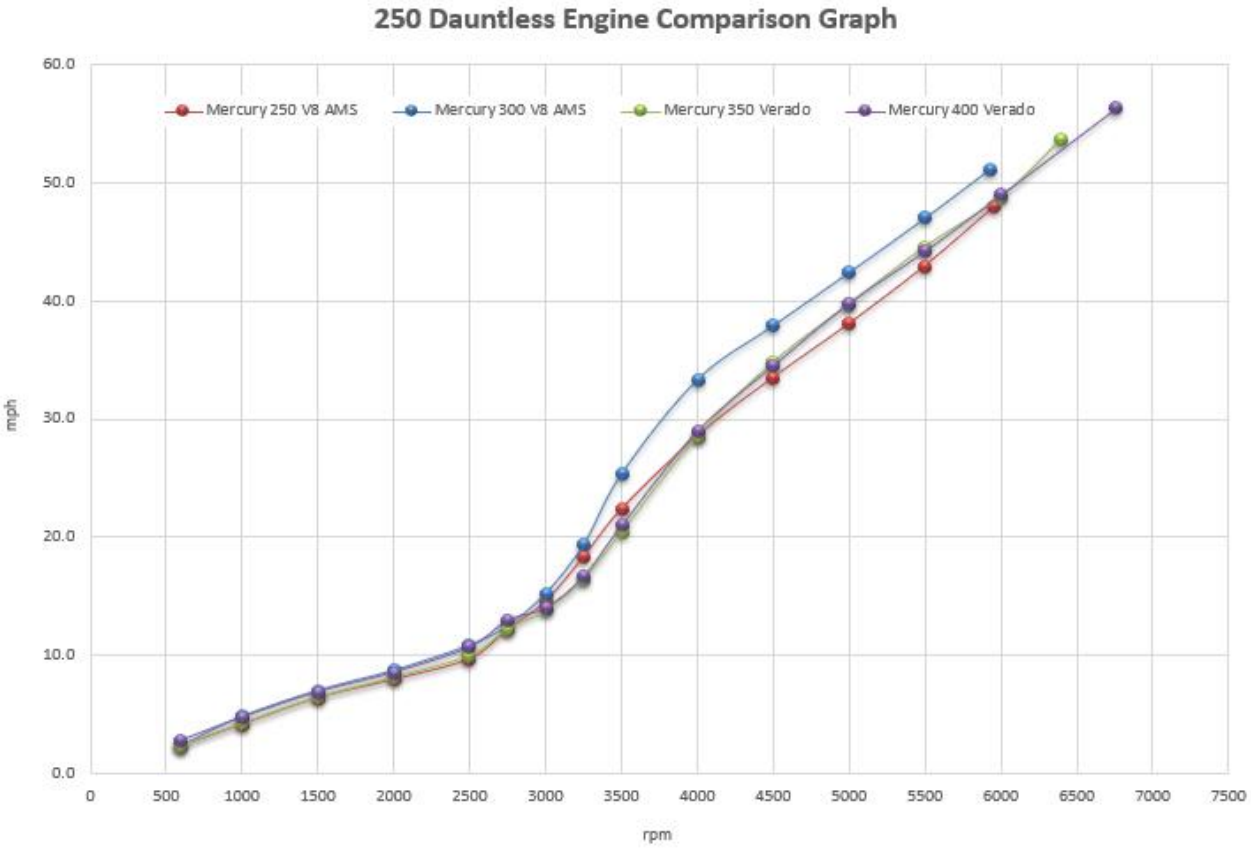

©2019 Boston Whaler. Confidential and all rights reserved.

Key Takeaways vs. 240 Dauntless

1. All-new, more seaworthy-hull design, 18-degree deadrise at transom, 2-inch deeper cockpit
2. All-new forward double lounge with garage storage provides additional comfort and storage
3. Helm seating options to suit any need from deluxe storage to reversible pilot seat with live well
4. Added fishability with transom live well, Gunwale rod holders and flush aft stern deck
5. Improved customer experience based on evolution, larger head door, watersport tow point on tops, Wireless phone charger

BOSTON WHALER