220 Dauntless

Sales Training January 2021

All-New: 220 Dauntless

2021 Model Year

All-New:
220 Dauntless

2021 Model Year

Capable and confident

Your boating isn't limited to inland water. You enjoy heading offshore on a good day. The Dauntless is ready to provide the safe ride in either environment.

Out of this world... not out of reach

You're looking for a quality boat. You're willing to spend the money as long as you can see the value. The new Dauntless has it where it counts.

Fits the mission

Days on the water are great. Fishing, watersports, and an evening cruise bring a family together. Dauntless brings family comfort and fishing capability together in one sleek platform.

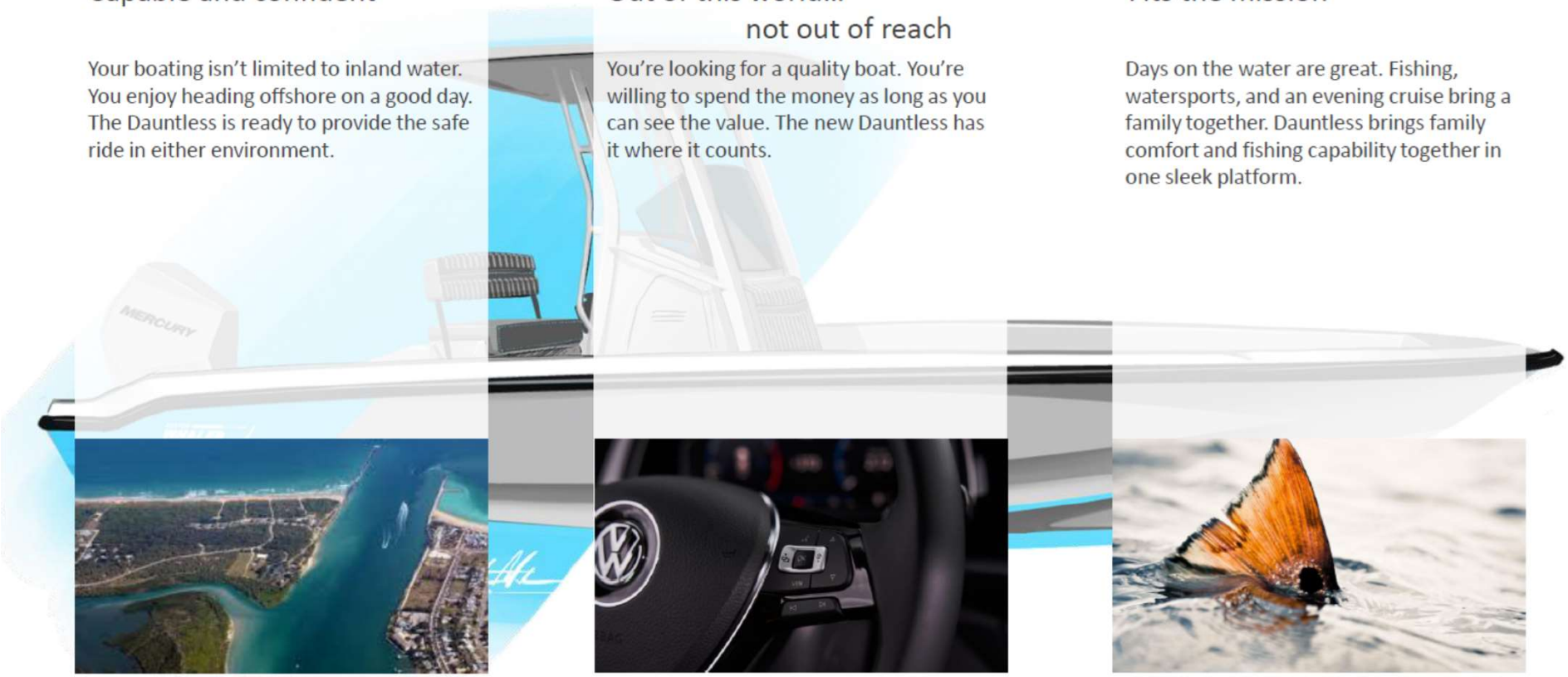

©2019 Boston Whaler. Confidential and all rights reserved.

This data is internal to Brunswick.

220 Dauntless Sales Training

- Spec Sheet
- Hull Changes
- NEW Bow Layout
- Features / Benefits
- Notable Options
- Performance
- Top 5 selling features

SPECIFICATIONS: Comparison between new and old models

210 Dauntless

LOA: 20’ 6” (6.24m) (on centerline, from bow to engine mounting location)

LOA: 21’ 3” (6.48m) (with platforms)

Beam: 8’ 6” (2.59m)

Draft: 14” (.36m)

Weight (dry, no engine): 2,600 lbs (1179.3 kg)

Weight (w/engine, fuel & water): 3,616 lbs (1,640 kg)

Maximum Weight Capacity: 2,300 lbs (1043 kg)

Swamped Capacity: 4,300 lbs (1950.4 kg)

Persons Capacity: 8

Maximum HP: 200 hp (149 kW)

Minimum HP: 150 hp (112 kW)

Maximum Engine Weight: 700 lbs (318 kg)

Transom Height: 25" (.64m)

Deadrise at Transom: 16º

Fuel Capacity: 75 gallons (284 L)

Bridge Clearance: 5’ 7” (1.70m)

Bridge Clearance with Top: 7’ 7” (2.31m)

Package boat specs (base boat on trailer, engine up:) 28’3” X 8’ 6” X 8’ 10” (Reduction for swing tongue 2’ 7”)

220 Dauntless

LOA: 22’ 0” (6.71m) (on centerline, from bow to engine mounting location) 18” Longer

LOA: 23’ 4” (7.11m) (with platforms) 25” Longer

Beam: 8’ 6” (2.59m)

Draft: 15“(0.38m) 1” Deeper

Weight (dry, no engine): 3,040 lbs (1329 kg)

Weight (with engine, fuel, and water): 4,190 lbs (1901 kg)

Maximum Weight Capacity: 2,340 lbs (1061 kg)

Swamped Capacity: 4,125 lbs (1871 kg)

Persons Capacity: 9 +1

Maximum HP: 250 hp (149 kW) + 50HP

Minimum HP: 200 hp (112 kW) + 50HP

Maximum Engine Weight: 550 lbs (249kg)

Transom Height: 25" (.64m)

Deadrise at Transom: 18º 2° Steeper

Fuel Capacity: 80 gallons (303L) +5 Gallons

Bridge Clearance: 5’ 11”

Bridge Clearance with Top: 7’ 10”

Package boat specs (base boat on trailer, engine up:) 30’ 10” x 8’ 6” x 8’ 10”

©2019 Boston Whaler. Confidential and all rights reserved.

This data is internal to Brunswick.

*LOA: (on centerline, from bow to engine mounting location)

What's new for the Dauntless Platform

- Keel Up Re-design
  - More capable and seaworthy- sharper bow entry with Increased flare to create better offshore performance
  - Increased freeboard- 2" more cockpit depth at the bow
  - Increased LOA to 23' 4" from 21' 3" (with platforms)

210 Dauntless

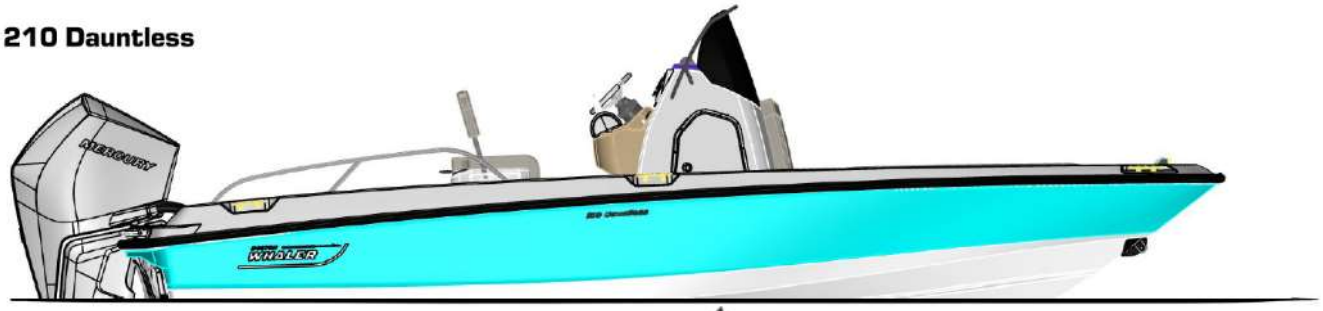

220 Dauntless

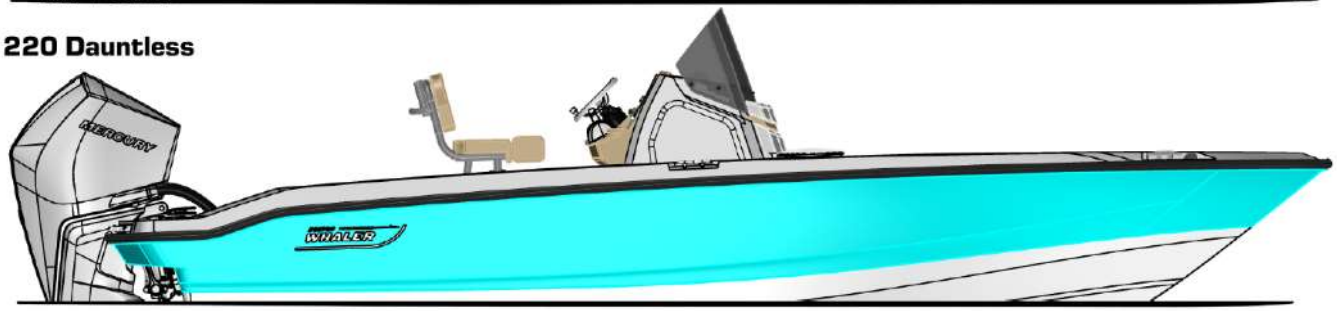

©2019 Boston Whaler. Confidential and all rights reserved.

This data is internal to Brunswick.

220 Dauntless

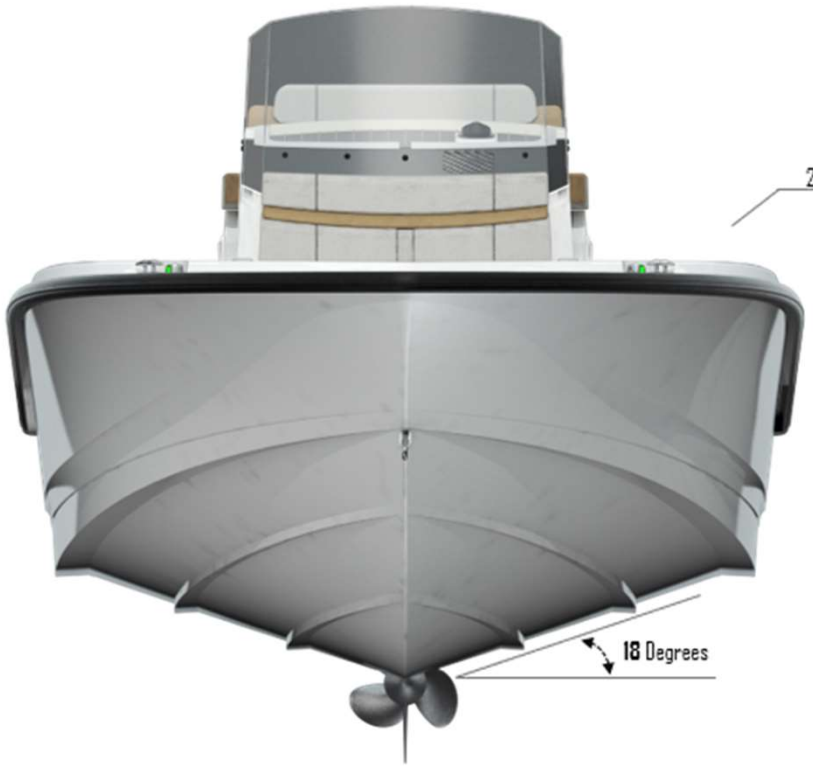

210 Dauntless

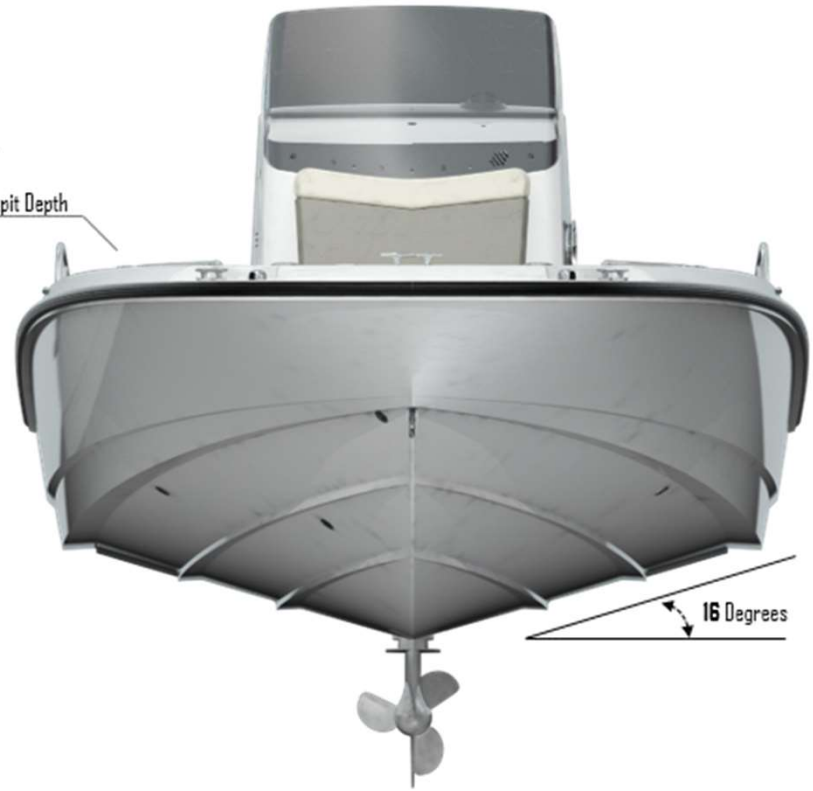

22" Cockpit Depth

20" Cockpit Depth

This data is internal to Brunswick.

Hull Changes

What’s new for the Dauntless Platform

More versatility for the whole family

- ❑ More standard fishing options
  - Flat, single level stern deck with no obstructions
  - Gunwale rod holders
- ❑ Improved comfort
  - Forward console lounge
  - Helm seating options
- ❑ Watersports tow point from tops
- ❑ No compromises - accommodates everyone's needs:
  - Fishing
  - Watersports
  - Entertaining

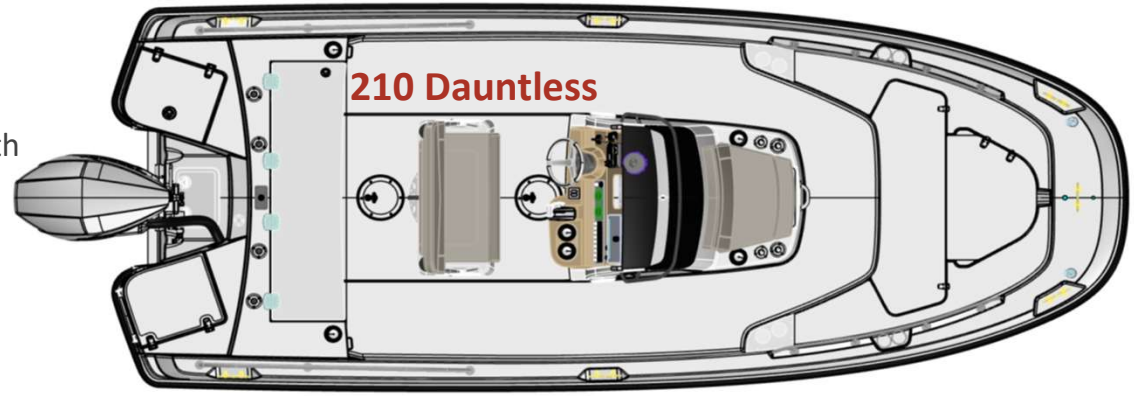

©2019 Boston Whaler. Confidential and all rights reserved.

This data is internal to Brunswick.

Bow Improvements

- All-new forward lounge
  - fold down arm rest and lockable, dry rod storage
- Large bow flat accommodates trolling motor panel
- Two forward 90-degree rod holders
- Welded stainless steel forward grab rails
- Fish box / cooler in forward bow deck with easy access paddle latch

All NEW Helm Console

New SeaDek lined chuck space (phones, wallet, keys)

New model designator on windscreen for a very custom look

Improved head access, wider entry door

©2019 Boston Whaler. Confidential and all rights reserved.

This data is internal to Brunswick.

All NEW
Helm Console Face

- ❑ Cast stainless steel steering wheel with knob
- ❑ Compass
- ❑ 12V receptacle
- ❑ optional glove box
- ❑ NEW dash visor chuck space with wireless phone charging
- ❑ NEW stainless-steel drink holders (2)
- ❑ larger electronics mounting surface fits 12” screen
- ❑ Electrical switch panel with circuit breaker protection

SAMPLE IMAGE

©2019 Boston Whaler. Confidential and all rights reserved.

NEW Helm Configurations

Standard Console
Mercury SC1000 Gauges
Aluminum switch panel
Steering Wheel from DA Pro

Axiom 9
Vessel View 4
Aluminum switch panel
VHF Radio
Fusion Stereo Head Unit
Glove Box

Axiom 12
Vessel View 4
Aluminum switch panel
VHF Radio
Fusion Stereo Head Unit
Glove Box

©2019 Boston Whaler. Confidential and all rights reserved.

This data is internal to Brunswick.

NEW Helm Configuration: Dual Axiom 9 Inch Screens

Sample Image
©2019 Boston Whaler. Confidential and all rights reserved.

Five Helm Seat Configurations

1. STANDARD: Reversible seat with storage / cooler
2. OPTIONAL: Reversible seat with livewell
3. OPTIONAL: Leaning Post frame with 75 Quart Yeti cooler
4. OPTIONAL: Deluxe Leaning Post with aft drawer storage
5. OPTIONAL: Deluxe Leaning Post with livewell

1

2

3

4

5

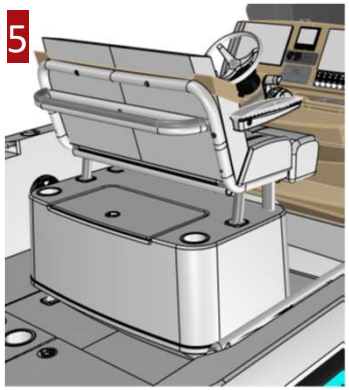

This data is internal to Brunswick.

STANDARD: Reversible Leaning Post with Storage

- ❑ Seat base and fuel tank cover molded as a single fiberglass piece
- ❑ Insulated fiberglass tub can be used for storage or a cooler
- ❑ New upholstery

This data is internal to Brunswick.

OPTIONAL: Reversible Leaning Post with Livewell

- ❑ Seat base and fuel tank cover molded as a single fiberglass piece
- ❑ Cooler tub becomes livewell
- ❑ New upholstery

This data is internal to Brunswick.

OPTIONAL: Frame Leaning Post with cooler

- ❑ Powder coated tube seat base with 75 Quart Yeti cooler
- ❑ New upholstered bench seat with flip-up bolsters and folding arm rest

This data is internal to Brunswick.

OPTIONAL:
Deluxe Leaning Post with Aft Drawer Storage

- ❑ Fiberglass seat base w/ aft storage drawers
  - Storage area accommodates a 5-gallon bucket inside
  - New upholstered bench seat with stand-up bolsters and folding arm rest

OPTIONAL:
Deluxe Leaning Post with Livewell

- Fiberglass seat base w/ livewell
  - Insulated blue interior and flush mounted lid
  - New upholstered bench seat with stand-up bolsters and folding arm rest

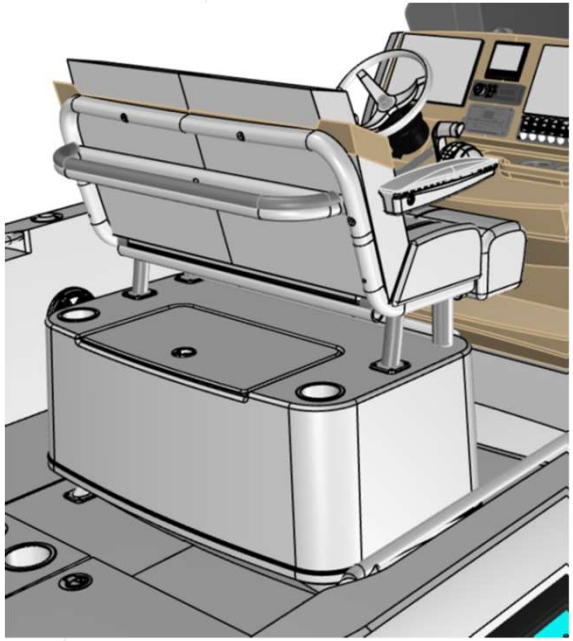

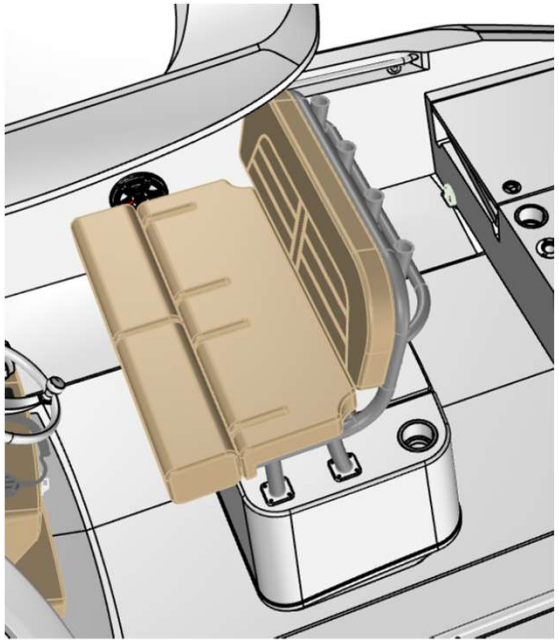

Stern Deck

- ❑ Flat surface (no more step)
- ❑ Stainless cup holders
- ❑ 3 standard rod holders
- ❑ Recessed hardware

©2019 Boston Whaler. Confidential and all rights reserved.

STANDARD:
Dual Jump Seats

- **Dual flip-up jump seats**
  - Flip-up design provides secure easy to deploy seating
  - No cushion snaps

©2019 Boston Whaler. Confidential and all rights reserved.

Deployable Swim Ladder

- ❑ Angled swim ladder for safer boarding
- ❑ Ladder stows under a fiberglass lid

©2019 Boston Whaler. Confidential and all rights reserved.

Rail Choices

- Standard: Low profile rails

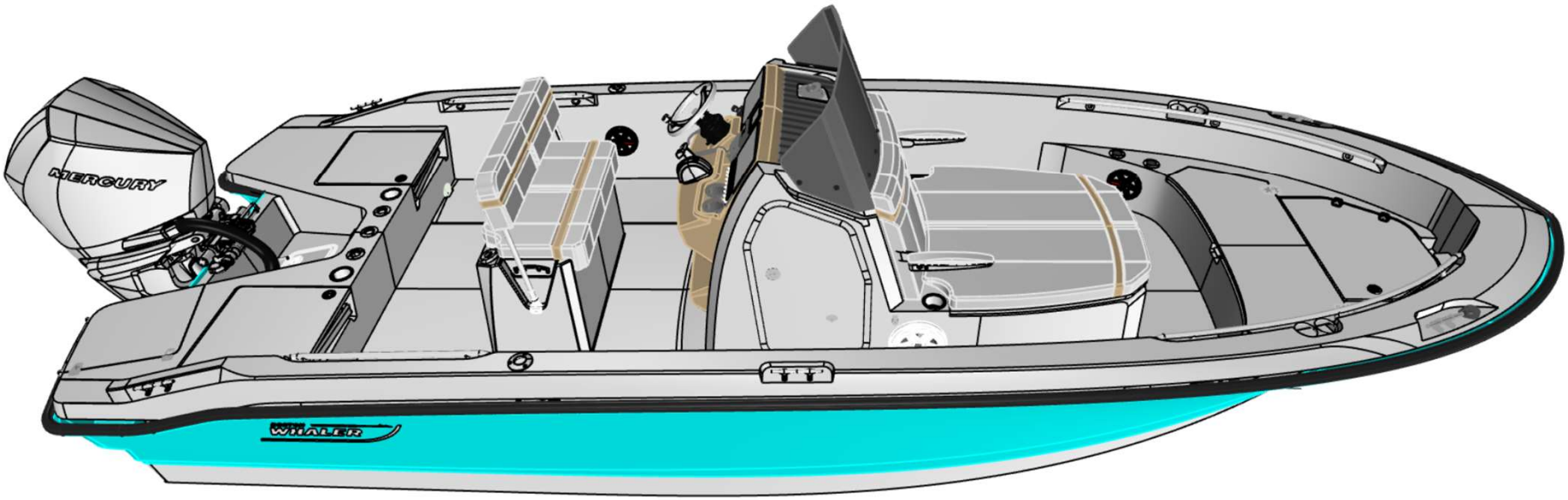

©2019 Boston Whaler. Confidential and all rights reserved.

This data is internal to Brunswick.

Rail Choices

- ❑ Optional High Rails
- ❑ Midship rod holder not compatible with high rail

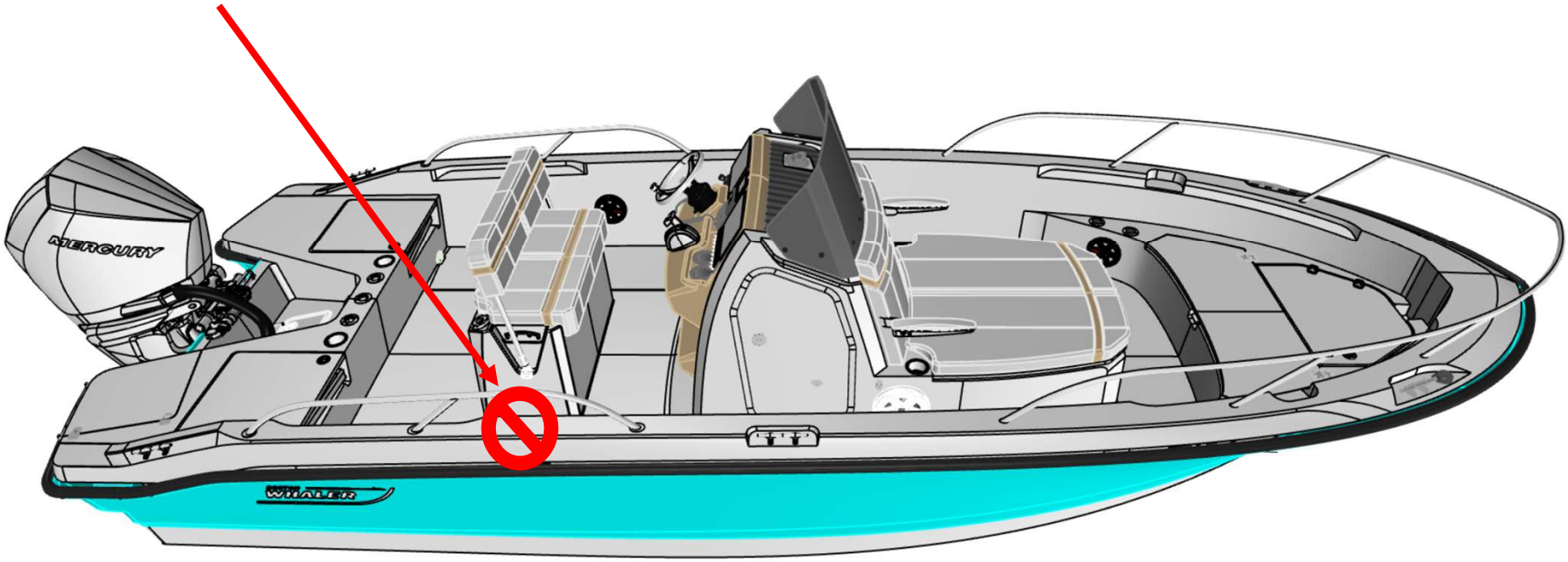

©2019 Boston Whaler. Confidential and all rights reserved.

This data is internal to Brunswick.

Optional:
Fiberglass Hard-Top

- ❑ Optional: White or Black Frame
- ❑ Optional; Colored gel on the underside of the fiberglass hardtop

©2019 Boston Whaler. Confidential and all rights reserved.

Optional:
T-Top with canvas

- ❑ Optional: Blue or Black Canvas
- ❑ Optional: White or Black Frame

Water Sports

- Tow point from both hard top and T-top

©2019 Boston Whaler. Confidential and all rights reserved.

This data is internal to Brunswick.

220 Dauntless Engines

Standard:

- 200 XL V6 CMS (DTS) Mercury with hydraulic power steering

Optional:

- 200 XL V6 CMS (DTS) **White** Mercury with hydraulic power steering
- 225 XL V6 CMS (DTS) Mercury with hydraulic power steering
- 225 XL V6 CMS (DTS) **White** Mercury with hydraulic power steering
- 250 XL V8 CMS (DTS) Mercury with hydraulic power steering
- 250 XL V8 CMS (DTS) **White** Mercury with hydraulic power steering

Available in black or white

©2019 Boston Whaler. Confidential and all rights reserved.

This data is internal to Brunswick.

Notable Options:

- Active engine trim
- Anchor roller (*not compatible with trolling motor panel)* (not for use as anchor stowage)
- Black rub-rail with stainless insert
- Bow and stern rails, High - (deletes low profile bow rail) (not compatible with Trolling Motor Panel)
- Bow table
- Bow tow eye
- Electric trim tabs with indicator
- Freshwater shower with 12-gallon tank
- Glove Box (Not compatible with 9" additional display)
- Porta potti with deck pump-out
- Raw-water washdown
- Satellite radio (Sirius® satellite receiver with antenna) (must order stereo option)
- SeaDek Cockpit flooring (mocha/black teak, UV protected, non-absorbent foam)
- Seating: Bow cushion (bow, port, and starboard cushions)
- Ski pylon (not compatible with All Activity Tower®
- Split bow rail – Includes high aft rails (deletes low profile bow rail) (not compatible with Trolling Motor Panel)
- Stereo - FUSION® AM / FM with waterproof speakers (4) and USB input (FUSION® Bluetooth enabled)
- Sunshade at bow (must select T-Top or Fiberglass Hardtop)
- Vessel View 4" Display (network connections to Raymarine with Navigation Package)
- White rub-rail
- White rub-rail with stainless steel insert

©2019 Boston Whaler. Confidential and all rights reserved.

This data is internal to Brunswick.

Other Notable Options:

ALL ACTIVITY TOWER® ***(not compatible with ski pylon)***

- Casting platform
- Ski and wakeboard racks
- Watersports tow point

TROLLING MOTOR PANEL (not compatible with anchor roller, sunshade at bow or Bow rail or split bow rail options)

- Battery boxes for trolling motor (3)
- Trolling motor panel with wiring

TROLLING MOTOR 36V WITH CHARGER (not compatible with anchor roller, sunshade at bow or Bow rail or split bow rail options)

- Battery boxes for trolling motors (3)
- Motorguide XI-5 trolling motor with GPS
- Trolling motor panel with wiring
- Battery charger

POWERPOLE

- Powerpole bracket
- Powerpole 8' or 10' (black or white)

©2019 Boston Whaler. Confidential and all rights reserved.

This data is internal to Brunswick.

Other Notable Options:

REVERSIBLE PILOT SEAT LIVEWELL

- Livewell (32-gallon) with blue interior
- Raw-water washdown
- Rod holders - stainless steel (2)

DELUXE LEANING POST WITH FLIP-UP BOLSTERS AND ARMRESTS

- Fiberglass leaning post
- Fold down armrests
- Flip up bolsters
- Integrated storage drawers

COMPETITION LEANING POST WITH FLIP-UP BOLSTERS AND ARMRESTS

- Aluminum frame leaning post
- Fold down armrests
- Flip up bolsters
- 4 integrated rod holders
- Slide out carry on cooler (Yeti 75 Qt.)

DELUXE LEANING POST WITH FLIP UP BOLSTERS, ARMRESTS AND LIVEWELL

- 30-gallon livewell w/blue interior
- Cup holders (2)
- Fiberglass base
- Knife/leader holder
- Raw water washdown (located on stern deck)
- Rod holders (4)

T-TOP (black or blue)

- Dome light (red and white)
- Storage bag
- Watersports tow point
- Rod holders (4)

FIBERGLASS HARDTOP

- Dome light (red and white)
- Lifejacket storage
- Watersports tow point
- Rod holders (4)

ALUMINUM TRAILER

- Disc brakes
- Guide on stanchions
- LED lights
- Radial tires
- Spare tire
- Dual Torsion axle

©2019 Boston Whaler. Confidential and all rights reserved.

This data is internal to Brunswick.

Optional: Electronics Package

9” RAYMARINE AXIOM 9 RV (RealVision)ELECTRONICS/NAVIGATION PACKAGE
Raymarine Axiom 9 RealVision 3D, 9” touch screen (GPS, chart plotter, fishfinder)
RealVision 3D, DownVision, SideVision and Chirp transom transducer
Navionics Chart Card: North America/Canada
Navionics Chart Card: Central/South America
Navionics Chart Card: Europe/Mid East/Asia
Navionics Chart Card: AU/NZ

9” Raymarine Axiom Additional Display (Must select the 9” Axiom Navigation Package Option or the 12” Axiom Navigation Package Option) (Not compatible with GloveBox)
Raymarine Axiom 9” with single channel chirp sonar

12” RAYMARINE AXIOM RV ELECTRONICS/NAVIGATION PACKAGE
Raymarine Axiom RV, 12.1” screen (GPS / chart plotter / fishfinder)
RV-100 3D Transom Mount Transducer
Navionics Chart Card – North America/Canada
Navionics Chart Card – Central/South America
Navionics Chart Card – Europe/Mid East/Asia
Navionics Chart Card – AU/NZ

©2019 Boston Whaler. Confidential and all rights reserved.
This data is internal to Brunswick.

Canvas options

- Combination helm seat / console cover (black or blue)
- Console cover (black or blue)
- Console lounge seat with backrest cover (black or blue)
- Helm seat cover (black or blue)
- Sun top with boot and stainless-steel fittings (black or blue)

©2019 Boston Whaler. Confidential and all rights reserved.
This data is internal to Brunswick.

220DNT Engine Performance: 200 V6 CMS

		Speed		Fuel Consumption			
	RPM	mph	knots	gph	mpg	nmpg	range (mi)
Idle	600	2.2	1.9	0.6	3.67	3.18	264
	1000	3.5	3.0	1.1	3.33	2.89	240
	1500	5.9	5.1	1.7	3.58	3.11	257
	2000	7.5	6.5	2.6	2.88	2.51	208
	2500	8.8	7.6	3.9	2.29	1.98	165
	2750	10.9	9.5	4.8	2.27	1.97	164
	3000	16.5	14.3	5.0	3.33	2.89	240
	3250	21.4	18.6	5.2	4.12	3.57	296
	3500	24.7	21.4	6.0	4.12	3.57	296
	4000	29.6	25.7	8.0	3.72	3.23	268
	4500	34.6	30.0	9.8	3.54	3.08	255
	5000	39.5	34.3	13.9	2.84	2.46	204
	5500	43.9	38.1	17.3	2.54	2.21	183
WOT	5750	46.0	39.9	17.4	2.64	2.29	190

©2019 Boston Whaler. Confidential and all rights reserved.

220DNT Engine Performance: 225 V6 CMS

		Speed		Fuel Consumption			
	RPM	mph	knots	gph	mpg	nmpg	range (mi)
Idle	600	3.0	2.6	0.6	5.00	4.34	360
	1000	5.0	4.3	1.1	4.71	4.09	339
	1500	7.1	6.2	1.6	4.44	3.85	320
	2000	8.1	7.0	2.6	3.10	2.69	223
	2500	9.8	8.5	3.8	2.61	2.27	188
	2750	12.4	10.8	4.8	2.61	2.27	188
	3000	18.0	15.6	4.5	4.00	3.47	288
	3250	21.0	18.2	5.2	4.07	3.53	293
	3500	24.4	21.2	5.8	4.24	3.69	306
	4000	30.0	26.1	7.9	3.82	3.32	275
	4500	35.3	30.6	9.8	3.60	3.12	259
	5000	39.5	34.3	12.9	3.06	2.66	220
	5500	44.2	38.3	17.1	2.59	2.25	186
WOT	6000	48.7	42.3	19.1	2.55	2.21	184

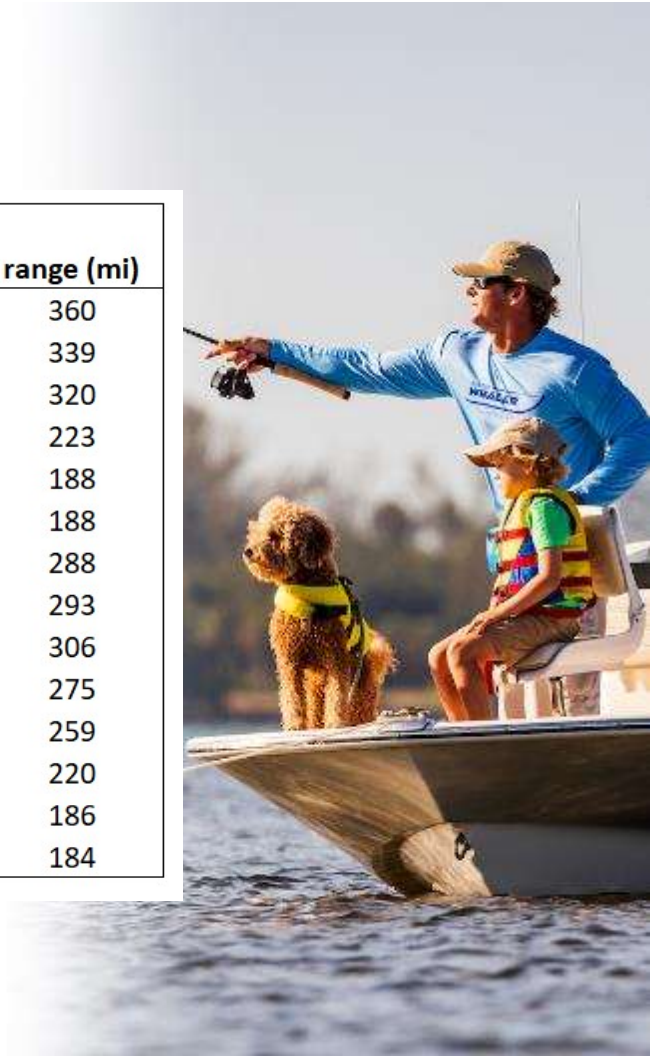

©2019 Boston Whaler. Confidential and all rights reserved.

220DNT Engine Performance: 250 V8 CMS (NO TOP)

		Speed		Fuel Consumption			
	RPM	mph	knots	gph	mpg	nmpg	range (mi)
Idle	600	2.6	2.2	0.8	3.40	2.95	245
	1000	4.5	3.9	1.3	3.46	3.01	249
	1500	6.6	5.7	2.1	3.14	2.73	226
	2000	8.1	7.0	3.3	2.45	2.13	177
	2500	12.6	10.9	4.2	2.99	2.59	215
	2750	16.3	14.2	4.6	3.58	3.11	258
	3000	22.2	19.3	5.3	4.23	3.67	304
	3250	24.9	21.6	6.0	4.18	3.63	301
	3500	28.0	24.3	6.9	4.08	3.54	294
	4000	32.7	28.4	8.9	3.67	3.19	264
	4500	37.7	32.7	11.1	3.41	2.96	245
	5000	42.3	36.7	14.0	3.03	2.63	218
	5500	47.2	40.9	18.7	2.52	2.19	182
WOT	6000	51.3	44.5	21.7	2.37	2.06	170

©2019 Boston Whaler. Confidential and all rights reserved.

220DNT Engine Performance: 250 V8 CMS (With T-TOP)

		Speed		Fuel Consumption			
	RPM	mph	knots	gph	mpg	nmpg	range (mi)
Idle	600	3.4	2.9	0.8	4.47	3.88	322
	1000	4.9	4.2	1.2	4.04	3.51	291
	1500	7.0	6.0	2.0	3.48	3.02	250
	2000	8.3	7.2	3.1	2.68	2.33	193
	2500	10.4	9.0	4.1	2.52	2.19	182
	2750	12.3	10.6	4.7	2.61	2.26	188
	3000	15.0	13.0	5.4	2.79	2.43	201
	3250	18.8	16.3	5.7	3.30	2.86	237
	3500	22.3	19.4	6.2	3.63	3.15	261
	4000	28.9	25.1	8.4	3.43	2.98	247
	4500	36.4	31.6	10.9	3.34	2.90	240
	5000	40.7	35.3	13.1	3.11	2.71	224
	5500	46.2	40.1	18.5	2.50	2.17	180
WOT	5960	50.3	43.6	21.2	2.37	2.06	171

©2019 Boston Whaler. Confidential and all rights reserved.

220DNT Engine Performance

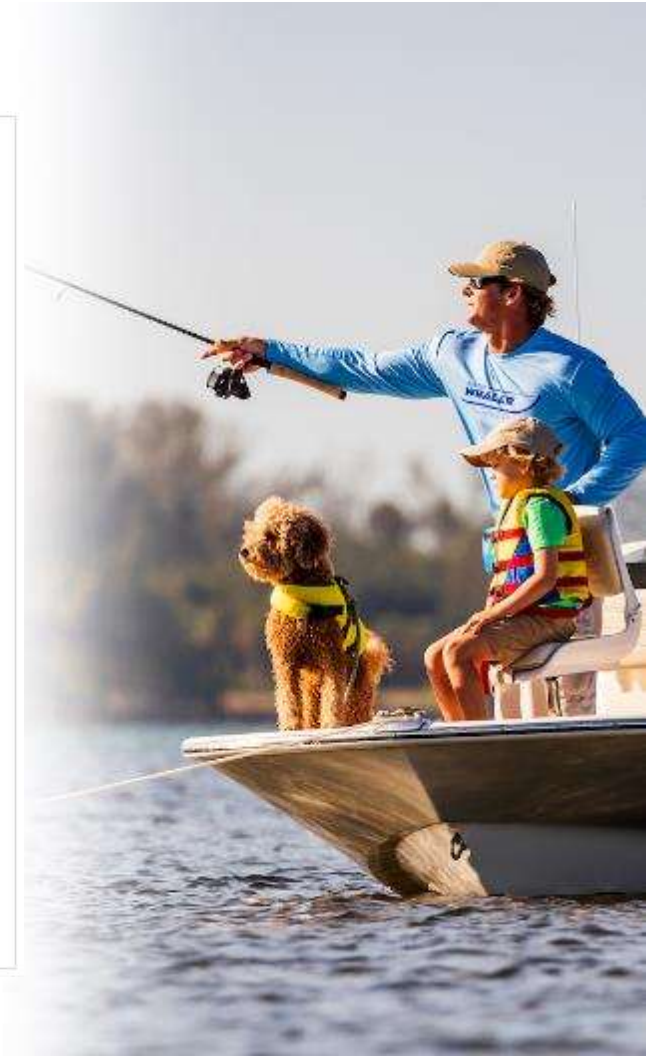

©2019 Boston Whaler. Confidential and all rights reserved.

Key Takeaways vs. 210 Dauntless

1. All-new, more seaworthy-hull design, 18-degree deadrise at transom, 2-inch deeper cockpit
2. All-new forward double lounge with garage storage provides additional comfort and storage
3. Helm seating options suit any needs from deluxe storage to reversible pilot seat with live well
4. Added fishability with gunwale rod holders and flush aft stern deck
5. Improved customer experience based on evolution, larger head door, watersport tow point on tops, Wireless phone charger

BOSTON WHALER